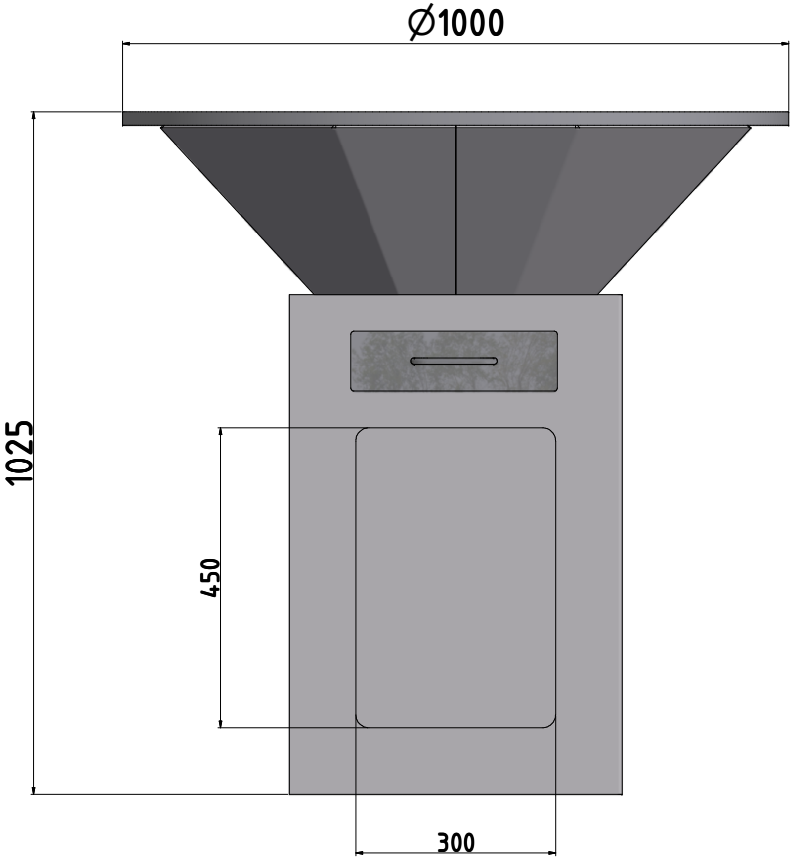
∅1000
1025
450
300